C-35257

ITEM	DESCRIPTION	DETAIL	REQUIRED FXD.	REQUIRED FLT.
1	HOUSING SDAFD 236	C-	1	1
2	SPHERICAL ROLLER BEARING	22236/W-33	1	1
3	STABILIZING RING SR-36-30	A-10610	1	0
4	LOCKNUT AN-36	B-10422	1	1
5	LOCKWASHER W-36	00252	1	1
6	TRIPLE SEAL RING LER-154	A-10672	1	1
7	TRIPLE SEAL RING LER-165	A-10675	1	1
8	DOWEL	ø$\frac{1}{2}$ x 1" LONG	2	2
9	CAP BOLT HEX. HEAD GR.5	1-8 NC x $7\frac{1}{2}$ LONG	4	4
10	LOCKWASHER	1" SPLIT MED.	4	4
11	PIPE PLUG	$\frac{3}{8}$-18 NPT	5	5

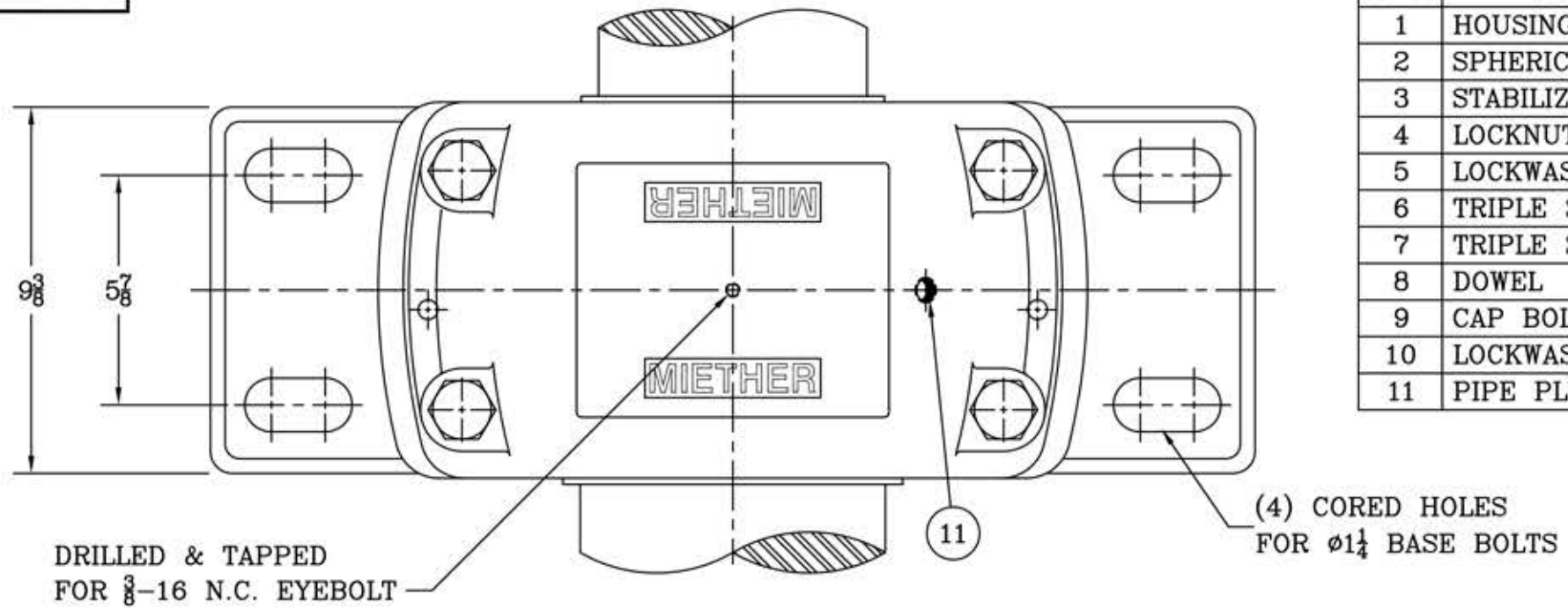

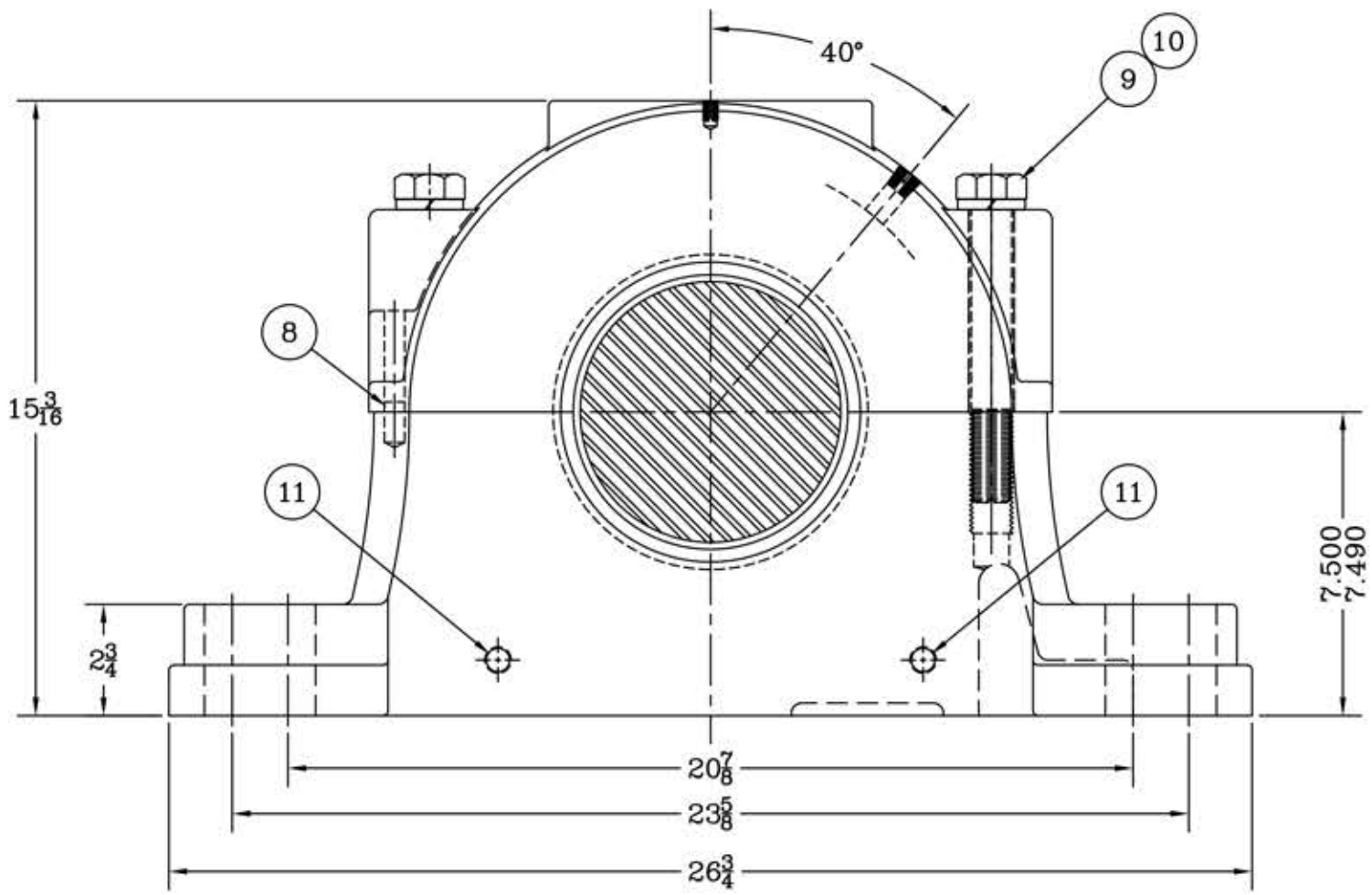

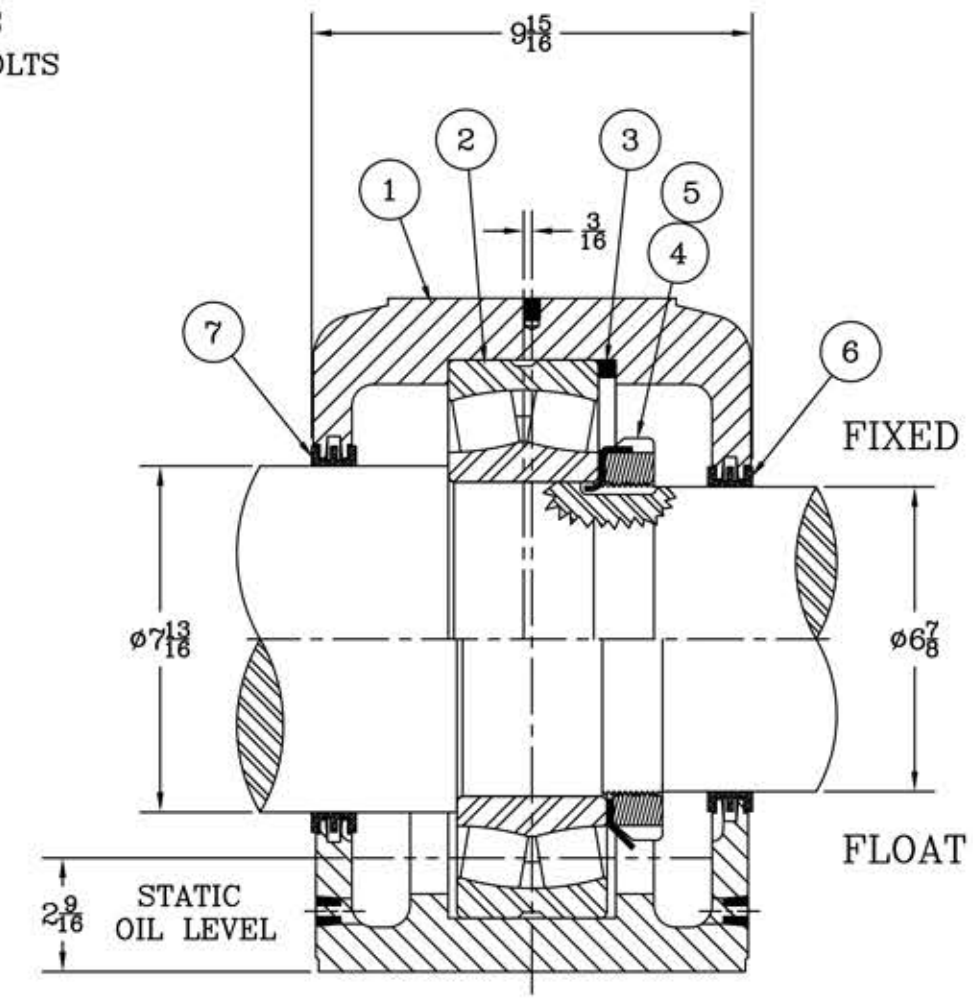

HOUSING MATERIAL – DUCTILE IRON
ASTM A536 GR 65-45-12

REVISIONS

TOLERANCE: UNLESS OTHERWISE SPECIFIED
FRACTIONS +- 1/32" ANGLES +- 0° 30'
DECIMALS +- .005" WELD +- 1/16"
CASTING +- 1/16"
A.I.S.I. STANDARD FINISHES

SYMBOL	C	D	E	F	G	J	K
MICRO-INCH VALUE	16	32	63	125	250	500	1000

MIETHER™ BEARING PRODUCTS
AN ALCO INDUSTRIES COMPANY
ODESSA, TX. USA

SDAFD 22236 07-13 x 06-14
ASSEMBLY DRAWING

SCALE 1 = 3	ASSEMBLY NO.
DRAWN PCF	
DATE 1/7/13	DRAWING NO. C-35257
CHK:	

This drawing is the sole property of Miether Bearing Products and contains confidential and proprietary information. It is being provided to you for your use and may not be disclosed to any third party or used for any other purpose without Miether's prior written consent. The [materials] must be returned to the Company upon its demand. Your acceptance of these materials constitutes your acceptance of the foregoing terms.